VESC MINIM

1 Features

- Field-Oriented-Control for brushless motors
- Maximum input voltage of 100 V, 50 A continuous current and 65 A pulsed current with adequate cooling
- Supports a multitude of control modes including current, duty cycle, speed and position control
- Open-Source firmware/scripting supports coding of custom applications that can run on the onboard STM32F405 MCU
- Per-phase phase low-side shunts and amplifiers with careful signal processing for precise phase current measurements
- Configurable sensor input ports compatible with hall sensors, ABI encoders, and some SPI based magnetic encoders
- Broad range of communication interfaces including USB, CAN, SPI, I2C, UART, PWM, and ADC inputs
- Integrated IMU with 3-Axis Accelerometer and 3-axis Gyroscope
- Integrated temperature sensors automatically protect the system during high power draw by smoothly ramping down the current
- Easy setup with VESC TOOL Desktop and Phone applications for fast integration alongside the possibility for deep customization
- Three low-side switches with flyback diodes for switching external loads of up to 1.5A with up to the full input voltage. Can be used for e.g. lights.

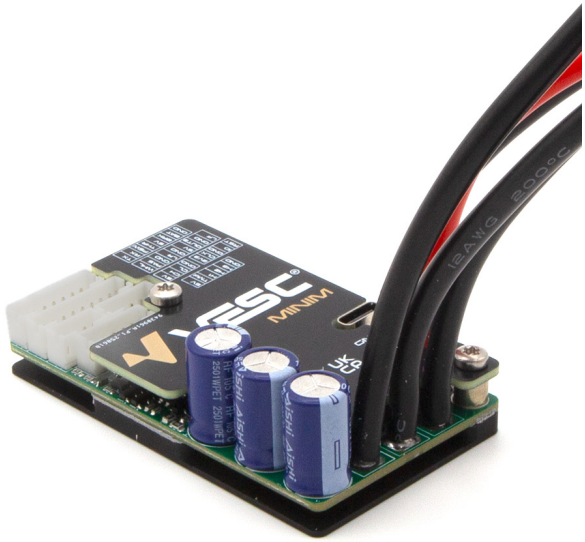

Figure 1: VESC Minim

2 Description

The VESC Minim is a feature-rich brushless motor controller which can provide up to 3 kW of continuous power when cooled appropriately. An on-board STM32F405 micro-controller running open-source VESC software enables precise motor control alongside configurable custom applications and scripting. It's breadth of external communication interfaces enables easy integration with many different systems and peripherals. It supports both sensorless and sensored brushless motor applications with full sinusoidal Field-Oriented-Control enabling quiet, efficient, and powerful motor dynamics. It also supports other advanced control techniques including overmodulation and field weakening for maximizing power and speed in certain applications, and high frequency injection for smooth sensorless control at and from zero speed.

Contents

1 Features **1**

2 Description **1**

3 Specifications **3**
3.1 Absolute Maximum Ratings . . . 3
3.2 Typical Operating Characteristics . . . 3
3.3 Recommended Operating Conditions . . . 3
3.4 Physical Properties . . . 3

4 Pinout and Wiring **4**
4.1 Pin Descriptions . . . 4
4.2 Wiring Diagram . . . 6
4.3 LispBM Extensions . . . 7

5 Device Installation **8**
5.1 Installation Warnings . . . 8
5.2 Mechanical Dimensions . . . 9

6 Configuring the Device **10**
6.1 Configuration Warnings . . . 10
6.2 Connecting the Controller to VESC Tool . . . 10
6.3 Using the Motor Setup Wizard . . . 10
6.4 Configuring Motor Current . . . 11
6.5 Configuring Battery Current . . . 11
6.6 Configuring Inputs . . . 12

7 Product Warranty **13**
7.1 Warranty Coverage . . . 13

8 Compliance & Regulatory Information **14**
8.1 CE Marking . . . 14
8.2 UKCA Marking . . . 14
8.3 WEEE Directive (2012/19/EU) . . . 14

3 Specifications

3.1 Absolute Maximum Ratings

Parameter	Min	Typ	Max	Unit
Input Voltage	12	92.4	100[1]	V
Battery Series (Li-Ion)	4		22	S
Input Current		50	65	A
Continuous Motor Current[2]		50		A
Pulsed Motor Current[2]			65[3]	A
PWM Switching Frequency		30	50	kHz
5V Auxiliary Current			2	A
3.3V Auxiliary Current			0.3	A
Servo ppm input	2		5.5	V
ADC inputs	0		5.5	V

3.2 Typical Operating Characteristics

Parameter	Typ.	Max	Unit
Sleep Input Current (90V Input)	10	40	uA
Awake resting Input Current (90V Input)	5	10	mA

3.3 Recommended Operating Conditions

Parameter	Min	Max	Unit
Operating Temperature	-40	85	°C
Humidity		Non-condensing	-

3.4 Physical Properties

Parameter	Value	Unit
Length	72	mm
Width	43	mm
Height	28	mm
Mass	115[4]	g

[1] Spikes may not exceed this, some margin should be accounted for. When using li-ion cells that charge up to 4.2V per cell at most 22 cells in series are recommended.

[2] The motor current listed is referring to the absolute current in the Dq frame of the motor and thus is related to the peak amplitude current any one motor phase wire will experience. A stalled motor running against the current limit can experience the peak current continuously if it happens to stall when aligned directly with a given phase.

[3] 10 - 30 seconds depending on starting temperature and external cooling. The full potential of the device can typically only be reached when using a liquid cooling block.

[4] Including cables and connectors.

4 Pinout and Wiring

4.1 Pin Descriptions

The VESC Minim has a several JST-PH connectors which the pin functions and limits are described in Table 2.

Pin	Name	Function	Limits	CPU Pin
Motor Sensors				
1	GND	Ground	1A	-
2	Hall Enc ABI	Hall 3 I	5V 5V	Hall 3 Hall 3
3	Hall Enc ABI	Hall 2 B	5V 5V	Hall 2 Hall 2
4	Hall Enc ABI	Hall 1 A	5V 5V	Hall 1 Hall 1
5	Temp Motor	Temp Sensor	3.3V	ADC Temp
6	5V	Power Out	1A	-
SWD				
1	RST	STM Reset	3.3V	NRST
2	IO	SWDIO	3.3V	PA13
3	GND	Ground	1A	-
4	CLK	SWCLK	3.3V	PA14
5	3V3	+3.3V	0.3A	-
CAN				
1	GND	Ground	1A	-
2	CANL	CAN	±60V	-
3	CANH	CAN	±60V	-
4	5V	Power Out	1A	-
IO				
1	LF	Front Light, Low Side	VBAT 1.5A	EXT1
2	GND	Ground	1A	-
3	OUT3	GP Switch, Low Side	VBAT 1.5A	EXT3
4	5V	Power Out	1A	-
5	GND	Ground	1A	-
6	LR	Rear Light, Low Side	VBAT 1.5A	EXT2
7	GND	Ground	1A	-
8	PAS / PPM	Pedal Assist / PPM	5V	PPM
9	WHL	Wheel Speed	3.3V	ADC3
Display				
1	GND	Ground	1A	-
2	BAT	Battery Voltage	2A	-
3	BRK	Brake Input	5V	ADC2
4	5V	Power Out	1A	-

5	THR	Throttle Input	5V	ADC1
6	PSW	Power Switch[1]	VBAT	-
7	RX	Receive UART	5V	UART RX
8	TX	Transmit UART	3.3V	UART TX

Table 2: Pin-functions of the VESC Minim

[1]Connect this pin to BAT (pin 2) to enable device. A normally open (NO) momentary button can also be used as the device will latch on when it received a power pulse. If a momentary button is used the device can switch itself off after a timeout.

4.2 Wiring Diagram

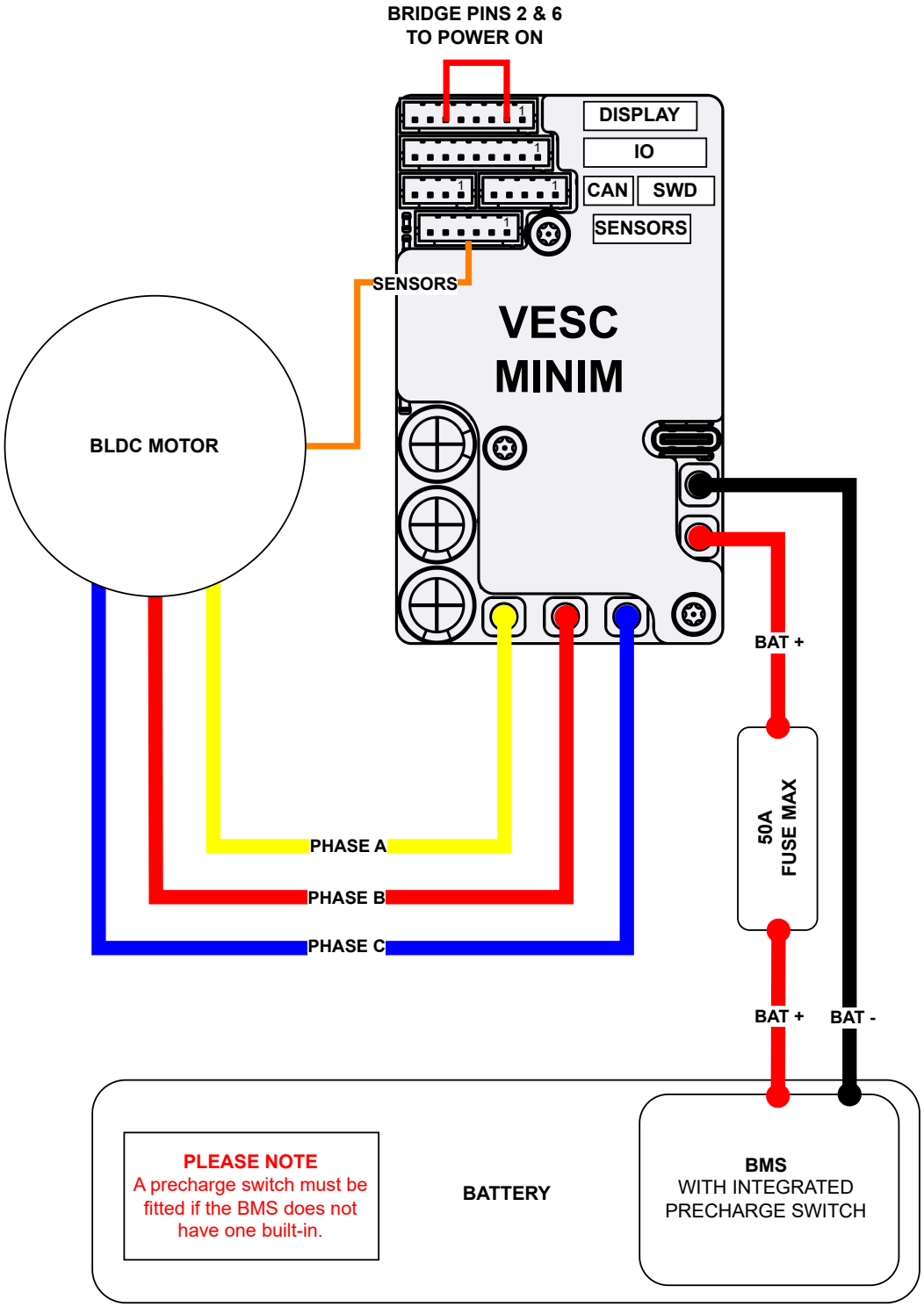

Figure 2: Composite image of VESC Minim with motor, battery and BMS with precharge switch.

4.3 LispBM Extensions

The output-pins (LF, LR and OUT3) marked as EXTx can be controlled with the following LispBM-extension

```
(hw-set-out io state)
```

where io is the pin to control and state is 1 or 0 for on or off. Example where LF is switched on:

```
(hw-set-out 1 1) ; Set EXT1 (LF) to 1
```

The wheel speed is tracked by measuring the time between pulses on the wheel speed input. This requires that the wheel speed input is set to a digital input and that a digital speed sensor is connected to it.

The following extension can be used to get the time it took between the two last wheel sensor pulses in seconds. The wheel speed can then be calculated from this time by using the wheel diameter.

```
(speed-last-time)
```

If the wheel stops rotating the senor pulses will stop coming, but (speed-last-time) will still return the time it took for the last revolution. The following extension can be used to tell how much time has passed since a speed pulse was received the last time. This can then be used to calculate an upper bound for the wheel speed.

```
(speed-age)
```

The following code is an example of how to track the wheel speed using the extensions above

```
(def wheel-rpm 0.0) ; Wheel RPM
(def wheel-kmh 0.0) ; Wheel speed in km/h
(def wheel-diam 0.6) ; Wheel diameter in meters

(loopwhile-thd ("SpeedSense" 150) t {
    (var wheel-age (speed-age))
    (var wheel-last (speed-last-time))

    (if (and (> wheel-last 0.0) (> wheel-age 0.0)) { ; Avoid division by 0
        (var rpm (/ 60.0 wheel-last))
        (var rpm-max (/ 60.0 wheel-age))
        (setq wheel-rpm (if (> rpm rpm-max) rpm-max rpm))
        (setq wheel-kmh (* 3.6 wheel-diam 3.14159 (/ wheel-rpm 60.0)))
        (override-speed 1 (/ wheel-kmh 3.6)) ; Override speed in VESC Tool gauges
    })

    (sleep 0.02)
})
```

5 Device Installation

5.1 Installation Warnings

- **Installation must be performed by qualified personnel** with experience in high-voltage battery systems and VESC-based motor controllers.
- **Read and fully understand all instructions, datasheets, and safety warnings** before beginning installation.
- **Gather all necessary tools and materials** including the device, wiring harnesses, connectors, insulation materials, and personal protective equipment.
- **Ensure the battery pack and motor system are prepared and properly arranged** with correct wiring paths and secure mounting.
- **Securely mount the device using threadlock** in a location protected from vibration, moisture, dust, and direct heat sources.
- **Do not install the device in locations exposed to water, condensation, or flammable materials.**
- **Install motor temperature sensors as required,** in order for the motor protection to ramp down the current smoothly when the motor is about to overheat.
- **Only use manufacturer-specified connectors and cables** to ensure safe and reliable connections.
- **Verify correct polarity for all connections.** Incorrect wiring can cause irreversible damage to the device, battery pack, or connected equipment. **Double-check the wiring diagram before proceeding.**
- **Insulate all exposed terminals and wiring** to prevent accidental short circuits or electric shock.
- **Keep metal objects and tools away from the device and power terminals during installation** to avoid accidental bridging of electrical contacts.
- **Tidy up and secure all cables** with cable ties or routing guides to prevent movement and wear.
- **Do not drill, cut, or modify the device enclosure or circuit board.** Unauthorized modifications may void the warranty and compromise safety or functionality.
- **Double-check all connections and wiring against the provided diagrams** before applying power to the system.
- **When powering up the system for the first time, do so in a controlled environment with appropriate protective equipment.** Be prepared to disconnect power immediately if any abnormal behaviour is observed.

5.2 Mechanical Dimensions

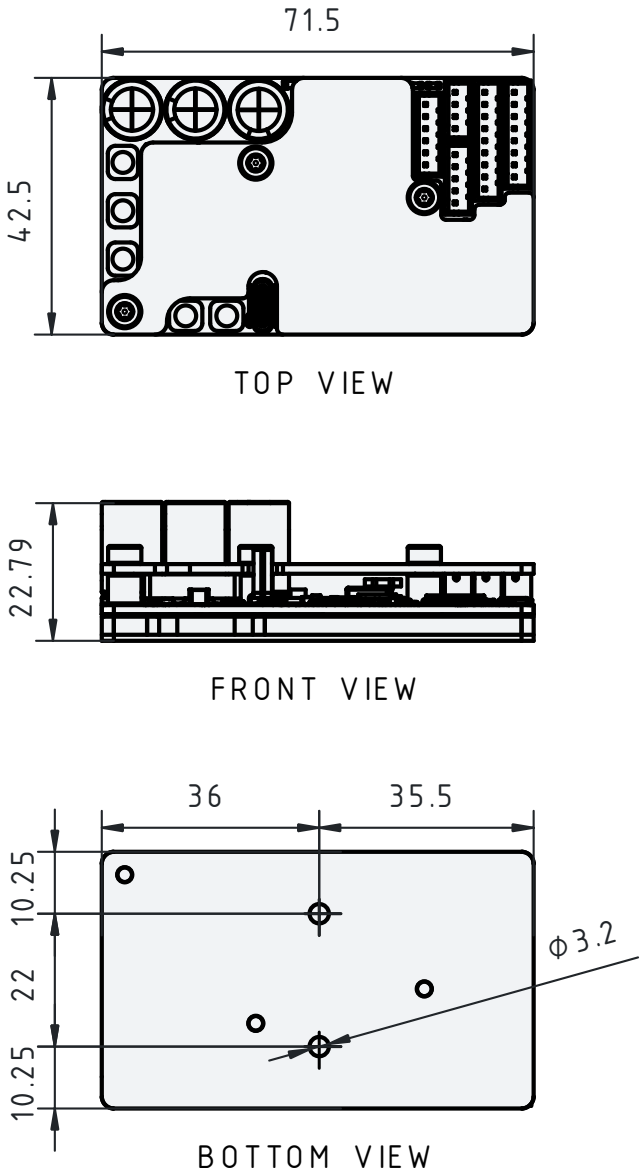

Figure 3: VESC Minim Dimensions shown in mm

6 Configuring the Device

6.1 Configuration Warnings

- **Double-check all wiring connections** before powering on the device. Incorrect wiring can cause damage to the device, battery cells, or pose a fire risk.
- **Always install the latest version of VESC Tool from the official website** to ensure compatibility with your hardware and access to the newest features, bug fixes, and safety updates. Download the installer from *vesc-project.com/vesc_tool* and follow the on-screen instructions. After installation, update your device firmware if prompted to ensure optimal performance.
- **Do not exceed the recommended voltage limits** for this device, your specific battery or motor system. Setting incorrect voltage thresholds can result in overvoltage errors or undervoltage cutoffs, potentially damaging the system.
- **Do not exceed the recommended current limits** for this device, your specific battery or motor system. Setting incorrect current thresholds can result in overheating or excessive stress on components, which may lead to failure or dangerous conditions.
- **Ensure the motor and any moving parts connected to it are free from obstruction and lifted off the ground before powering on the device.** This prevents unexpected movement that could cause injury, damage, or interference with calibration and configuration procedures
- **Avoid configuring the device in wet or humid environments.** Moisture can cause short circuits and damage sensitive electronic components.
- **If you are unsure about any configuration step, consult the datasheet or seek professional assistance.** Improper configuration can void warranties and lead to hazardous conditions.
- **Wear appropriate personal protective equipment (PPE),** such as safety glasses and gloves, when working with high-voltage systems.

6.2 Connecting the Controller to VESC Tool

The controller can be connected to VESC Tool via USB or CAN. For instructions on how to connect with and navigate VESC Tool please visit `https://www.vesclabs.com/category/getting-started/`.

1. Connect the controller to VESC Tool using one of the mentioned methods.
2. Ensure the **"VESC Minim"** has been selected from the list of CAN devices if you have connected through another device via CAN.

6.3 Using the Motor Setup Wizard

1. On the **Welcome & Wizards** page select the **"Setup Motors FOC"** wizard.
2. Confirm that you want to load default parameters by pressing **"Yes"**.
3. Select the usage which matches closest to your application followed by pressing **"Next"**.
4. Select the size of motor which is connected to the controller followed by pressing **"Next"**.
5. Select the **"Battery Type" from the drop-down list**.
6. Enter the number of **"Battery Cell Series"**.
7. Enter the **"Battery Capacity"** followed by pressing **"Next"**.
8. Select whether the system is direct drive or not.
9. Enter the values of **"Motor Pulley"** and **"Wheel Pulley"** in order to calculate the gear ratio of your system.

10. Enter the number of **"Motor Poles"** which your motor has.
11. Press the **"Run Detection"** button to continue.
12. **Ensure the motor and any moving parts connected to it are free from obstruction and lifted off the ground before running the detection.** This prevents unexpected movement that could cause injury, damage, or interference with calibration and configuration procedures.
13. Confirm whether you want to **detect the motor** connected to the controller or **all of the motors** connected to the controllers via CAN Bus, followed by pressing **"Ok"** to start the detection.
14. Check the detection results are correct for you system followed by pressing **"Continue"**.
15. Check the **motor direction** is correct for you system by pressing the **"FWD"** or **"REV"** buttons. **If the direction is incorrect**, select the **"Inverted"** toggle button to swap the direction of the motor.

6.4 Configuring Motor Current

1. Navigate to the **"General Motor Settings"** section from the menu on the left of the screen (on desktop), or by swiping across the screen on a mobile device.
2. Select the **"Current"** tab at the top of the screen.
   Before proceeding check the limits of your controller and motor.
   Do not exceed the current limits of the controller or motor!
3. Enter the value of **"Motor Current Max"** rated for your motor or application.
4. Enter the value of **"Motor Current Max Brake"** rated for your motor or application.
5. Enter the value of **"Absolute Maximum Current"** rated for the motor or application.
6. Press the **"Write Motor Configuration"** button to write the new configuration to the controller.
7. If **multiple controllers** have been connected via CAN (or a **dual controller**), swap CAN devices and follow steps 1-6 to apply the settings to the other controllers connected.

6.5 Configuring Battery Current

1. Navigate to the **"General Motor Settings"** section from the menu on the left of the screen (on desktop), or by swiping across the screen on a mobile device.
2. Select the **"Current"** tab at the top of the screen.
3. Enter the value of **"Battery Current Max"** rated for your battery or application.
   Battery current max can be calculated from the **maximum output current** of your battery or BMS, divided by how many motors are in the system.
4. Enter the value of **"Battery Current Max Regen"** rated for your battery or application.
   Battery current max regen can be calculated from the **maximum charge current** of your battery or BMS, divided by how many motors are in the system.
5. If multiple controllers have been connected via CAN (or a **dual controller**), swap CAN devices and follow steps 1-4 to apply the settings to the other controllers connected.

6.6 Configuring Inputs

1. On the **Welcome & Wizards** page select the **"Setup Input"** wizard.
2. Press the **"Next"** button which will start scanning for other devices connected via CAN bus.
3. Select the type of input you would like to control the controller.
4. Move the input(s) to the maximum position, including forwards, backwards and centre on bi-directional inputs.
5. Press the **"Apply"** button to map the input.
6. Move the input(s) to the maximum position, checking that the input has been mapped correctly.
7. Select the **"Next"** button to continue.
8. Select the control type for your application from the drop-down list. Please use the "?" icon which explains the difference in control types.
9. Select the **"Next"** button to continue.
10. Select the **"Finish"** button to complete the setup.

7 Product Warranty

7.1 Warranty Coverage

Please find the warranty information regarding VESC Labs products using the following link:
`https://www.vesclabs.com/warranty-and-returns-policy/`

8 Compliance & Regulatory Information

8.1 CE Marking

This product meets the requirements of all applicable EU directives and regulations and complies with the essential health, safety, and environmental protection requirements as set out in relevant legislation. It is CE marked in accordance with:

- **Directive 2014/30/EU** – Electromagnetic Compatibility (EMC)
- **Directive 2014/35/EU** – Low Voltage Directive (LVD)
- **Directive 2011/65/EU** – Restriction of Hazardous Substances (RoHS)

8.2 UKCA Marking

This product is compliant with UK regulations and bears the UKCA marking, confirming its conformity with the applicable statutory requirements in Great Britain. It meets the relevant provisions of:

- Electrical Equipment (Safety) Regulations 2016
- Electromagnetic Compatibility Regulations 2016
- The Restriction of the Use of Certain Hazardous Substances in Electrical and Electronic Equipment Regulations 2012

8.3 WEEE Directive (2012/19/EU)

This product is compliant with the Waste Electrical and Electronic Equipment (WEEE) Directive. It should not be disposed of with unsorted municipal waste and must be collected separately for proper treatment and recycling. Please contact your local distributor or relevant waste authority for information on recycling options and collection facilities.